DWG. ISSUE	PART REV.	REVISION BLOCK					
		ECO NO.	DESCRIPTION	DR.	DATE	CK.	DATE
1	A		GENERAL LAYOUT DRAWING	RW	6-12-06		

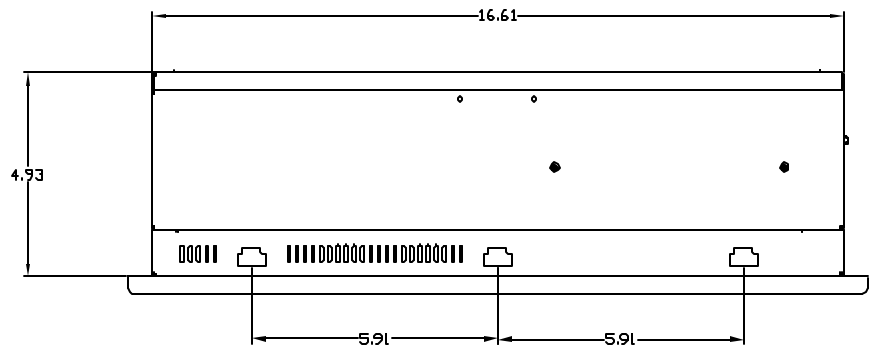

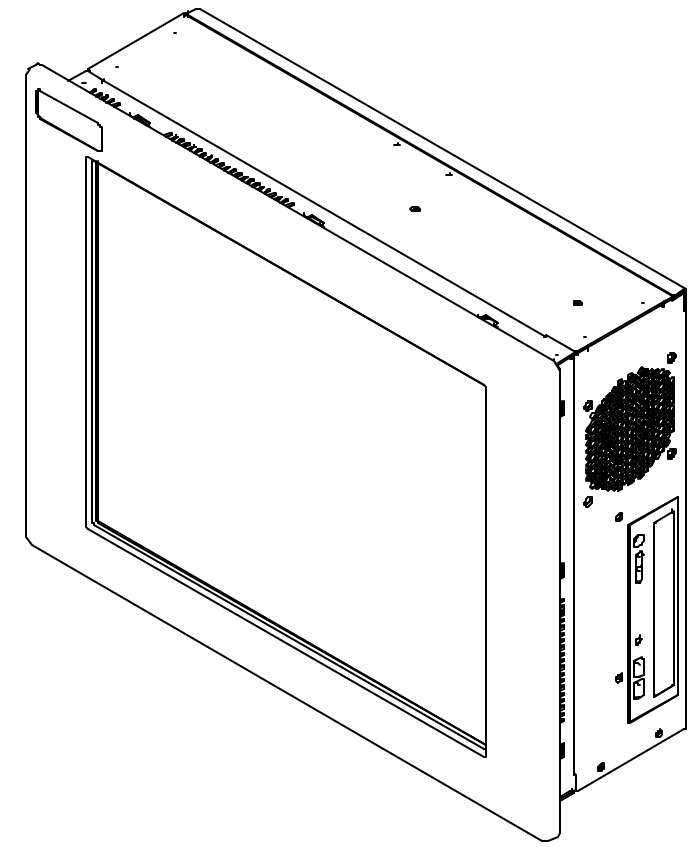

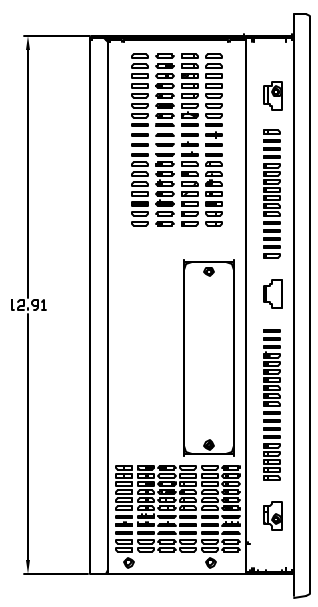

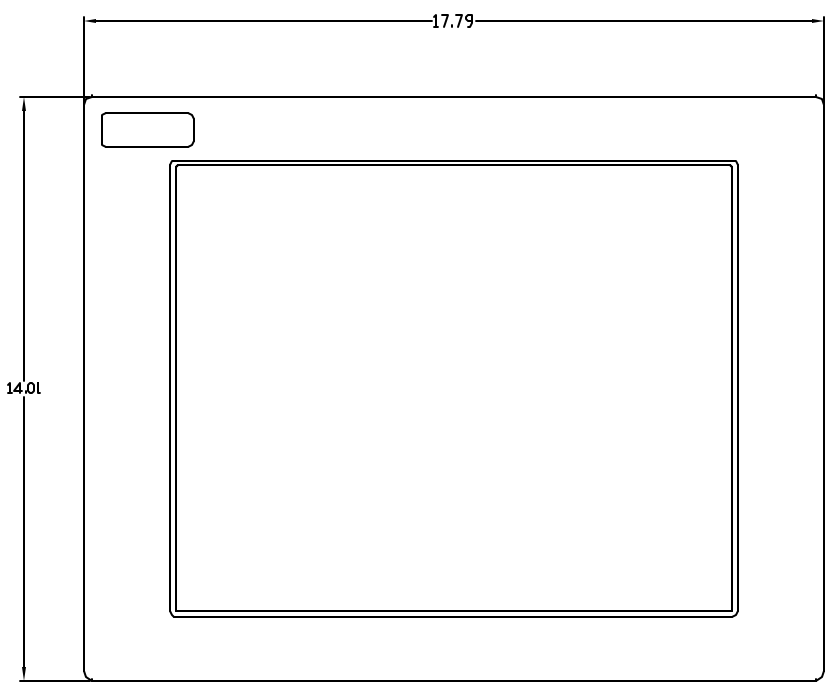

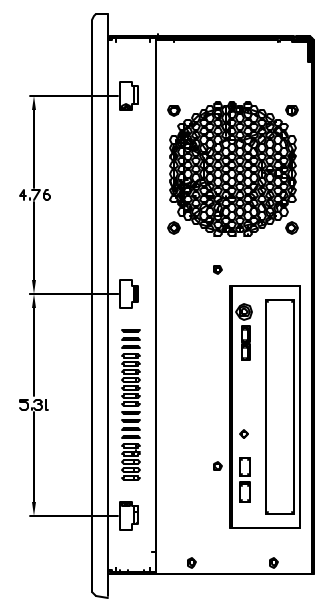

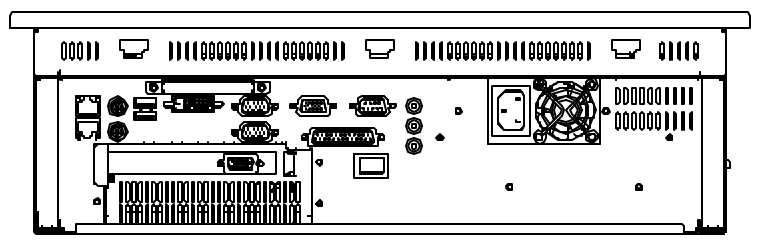

THIRD ANGLE PROJECTION

						SIGNATURES
DR.	M. WILLIAMS	MC	EC	QE/QA	MFG	REVISION A RELEASE
CK.						

INTERNAL USE ONLY — SPEC. — SER. — FIRST USED ON MODEL

ASSOCIATED DRAWINGS

TOLERANCES UNLESS OTHERWISE SPECIFIED DECIMALS .XX ±.01 .XXX ±.005 .XXXX ±.0005 ±1 PLACE ±1 ±1 PLACE ±.5 ±XX PLACE ±0.25 ±XXX PLACE ±0.13 HOLE DIA. ±0.05

THESE DRAWINGS ARE THE PROPERTY OF XYCOM AUTOMATION, INC. NOT TO BE REPRODUCED OR DISCLOSED WITHOUT EXPRESSED WRITTEN AUTHORIZATION FROM XYCOM

XYCOM AUTOMATION
750 N. MAPLE RD.
SALINE, MI. 48176

TITLE
GENERAL LAYOUT
4117T

SCALE FULL — SHEET 1 OF 1 — DWG. NO. 144633